## Veotec Plume Eliminator (PE1)

The PE1 was engineered to abate unsightly and potentially harmful plumes from reaching the outside environment.

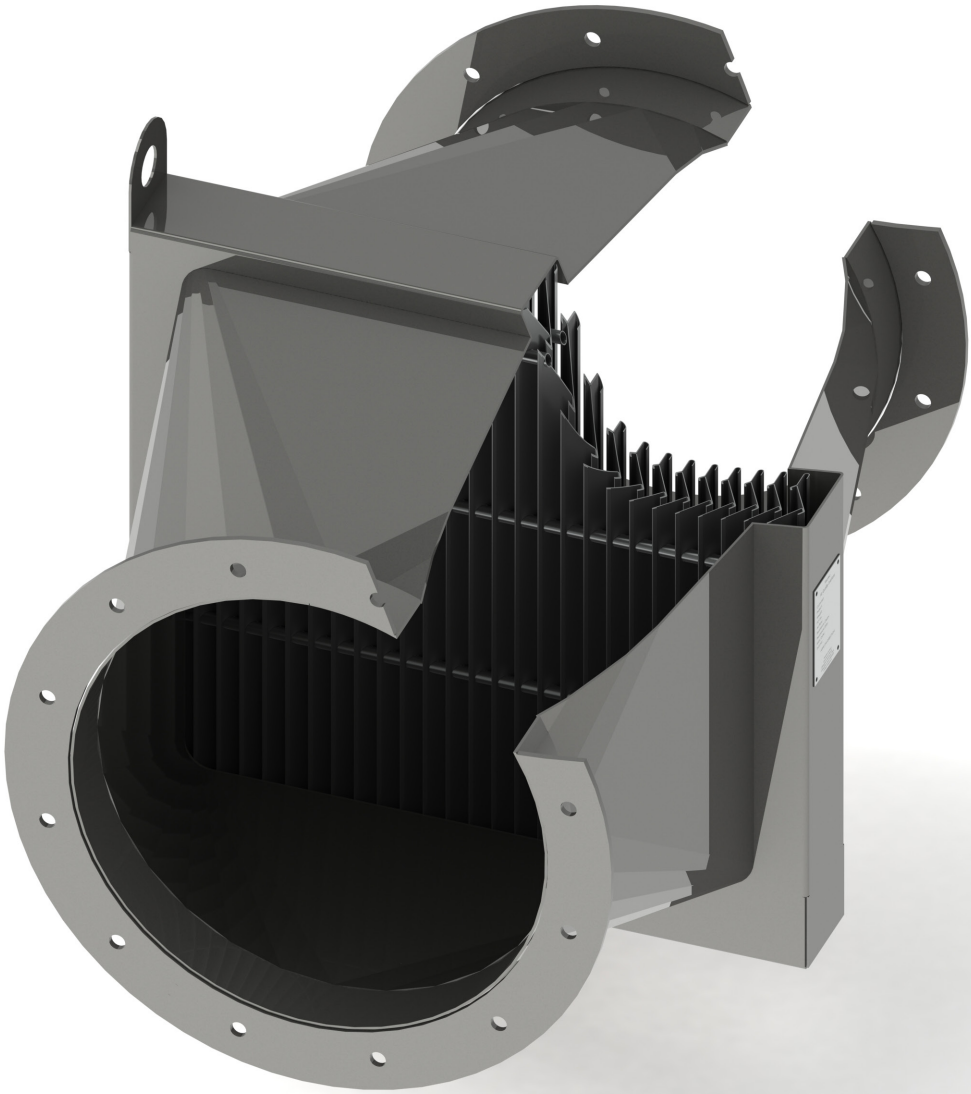



wozair
HVAC SPECIALISTS


Wozair reserves the right to make changes to this datasheet without notice.

## Single Stage Plume Eliminator

The PE1 is used in industrial environments and is designed to collect moisture and contaminants from the air inside a condensing boiler flue or exhaust.

## Features & Benefits

- Removes airborne moisture and contaminants
- High efficiency
- Low pressure loss
- Low maintenance
- Custom drainage available
- Optimised for maximum efficiency
- 30+ sizes available

## Applications

- Industrial heating applications
- Flue dilution system
- Industrial

## Materials of Construction (Casing)

**Materials**
Stainless Steel 316L (DIN 1.4404)

**Thickness**
Casing thickness shall depend on the overall size of the Plume Eliminator and shall be stated on the General Arrangement Drawing unless otherwise specified

**Finish**
Pickle and Passivate

**Construction**
Fully welded

## Materials of Construction (SE Profile Vane)

**Materials**
Stainless Steel 316L (1.4404)

**Finish**
Natural (Brushed 180 grit prior to forming)

**Construction**
0.6mm (24 guage U.S.G.) thick roll formed from coil

**Vane Spacing**
316L Stainless Steel Expanded Tubing



Wozair reserves the right to make changes to this datasheet without notice.

## Performance & Efficiency

Wozair's performance and efficiency data has been independently verified by an independent testing laboratory and is proven to meet the highest of industry standards.

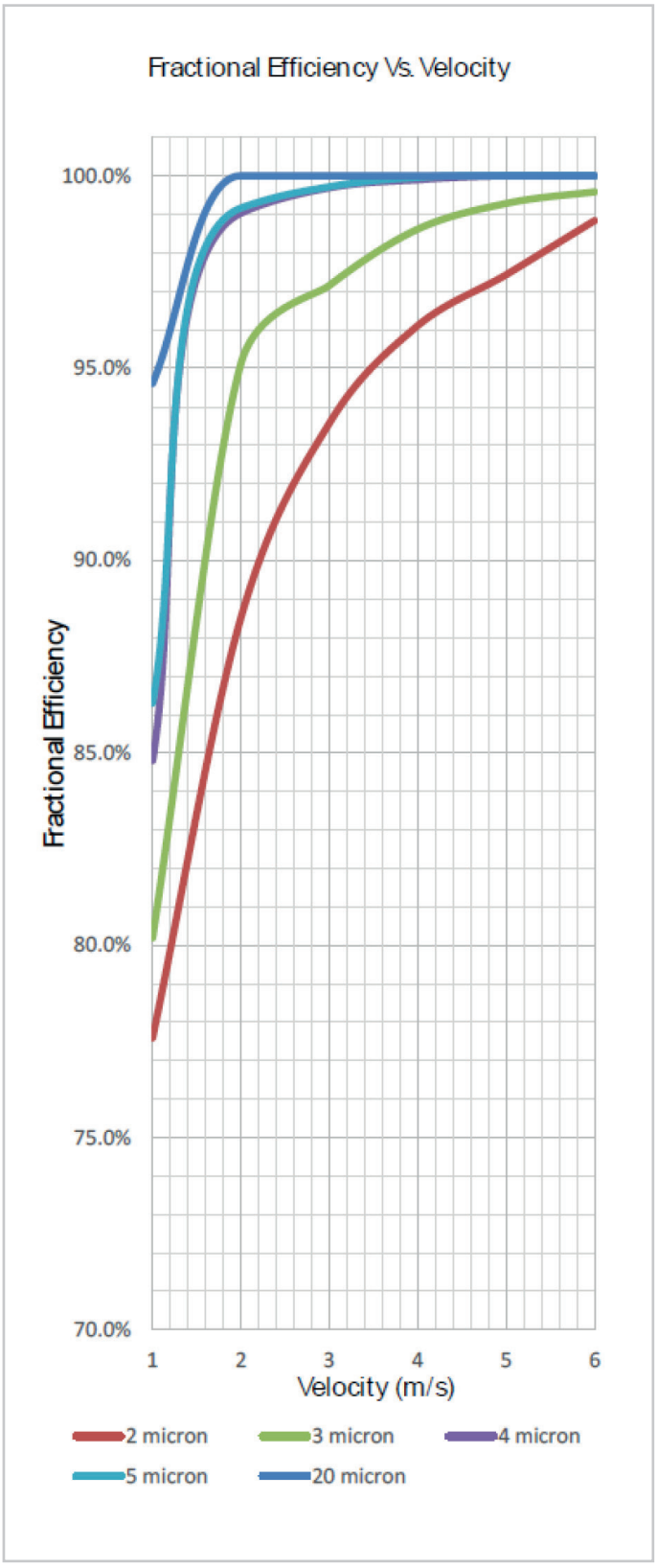


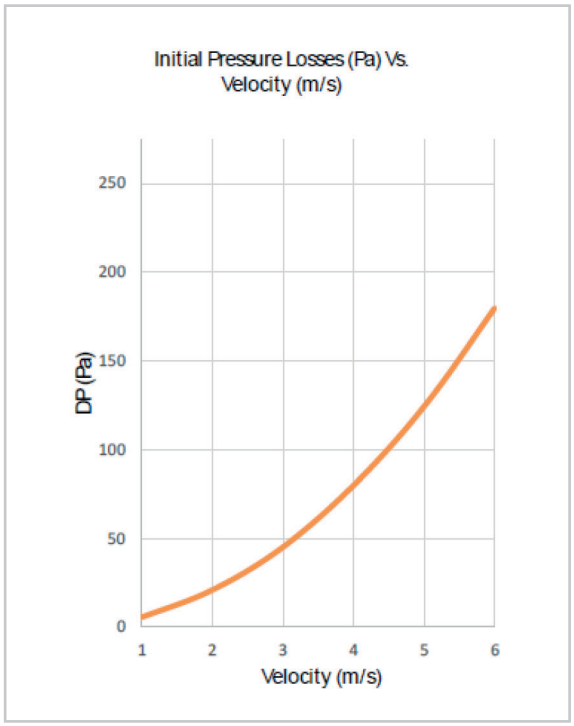


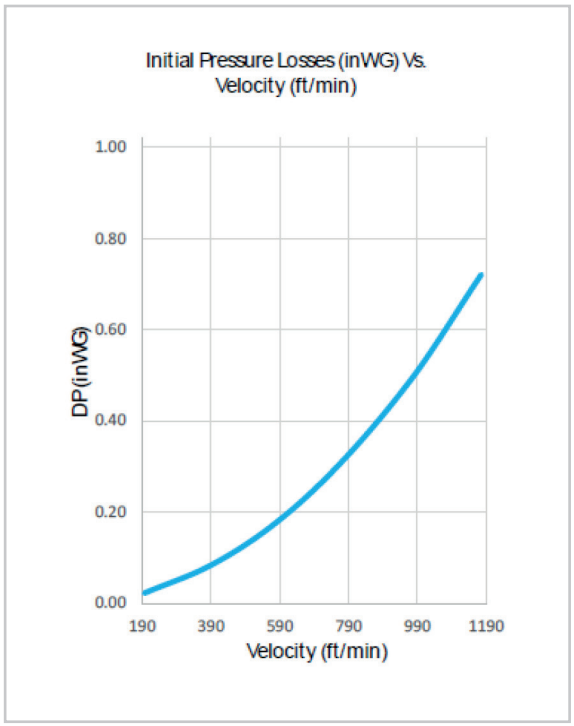


FPAL empowered by Achilles Registered



wozair HVAC SPECIALISTS

Wozair reserves the right to make changes to this datasheet without notice.

**Wozair Limited**
Grosvenor Road
Gillingham Business Park
Gillingham
Kent
ME8 0SA
United Kingdom

**Phone** +44 (0)1634 790 336
**Email** hvac@wozair.com

**Wozair (USA) Ltd**
3601 North Loop
336 West
Conroe
Texas
77304
United States of America

**Phone** +1 936 521 5990
**Email** houstonhvac@wozair.com

**Wozair (Asia) Pte Ltd**
2 Venture Drive
8-23 Vision Exchange
608526
Singapore

**Phone** +65 6890 6506
**Email** hvac@wozair.com.sg

**Wozair Middle East**
JAFZA One
Tower B, Office 1316
Jebel Ali Free Zone
Dubai, UAE
P.O. Box 262404

**Phone** +971 (0) 4 887 0147
**Email** dubaihvac@wozair.com